DRAWING NUMBER G-501541-2 (1/2)

SYM	DATE	ZONE	DESCRIPTION	DESIGNED	CHECKED	APPROVED DATE
A	May. 10, 2005	—	Initial Issued	—	—	—

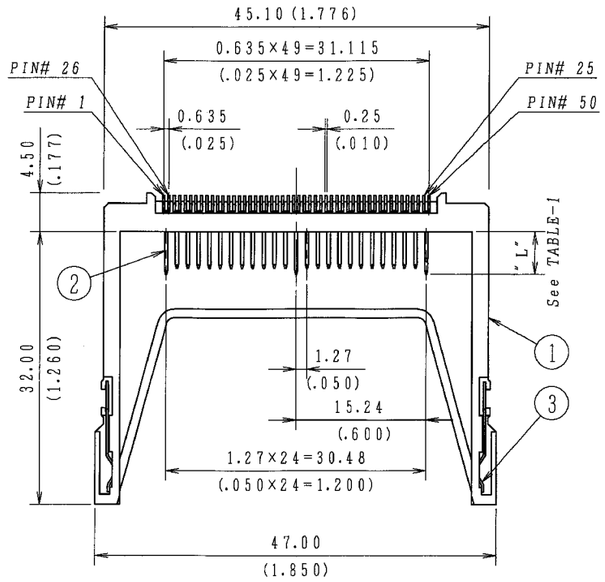

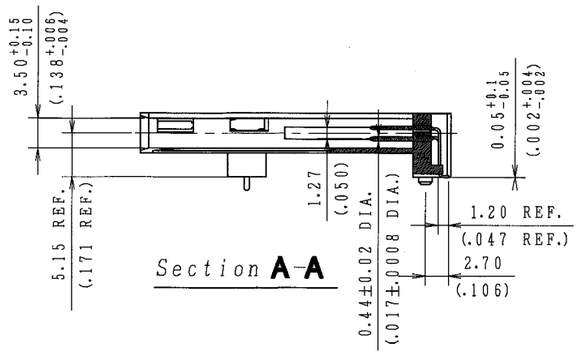

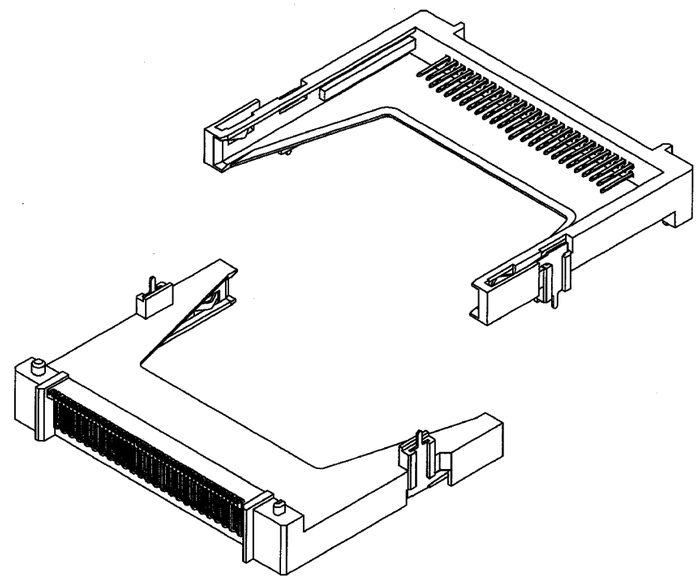

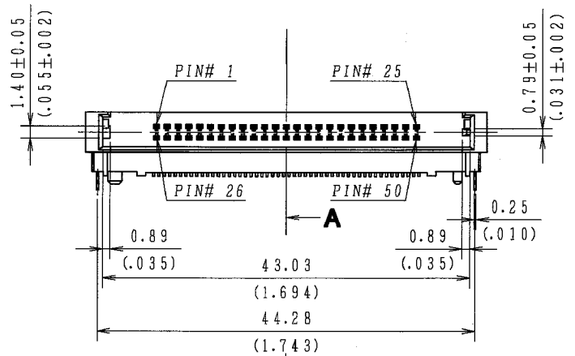

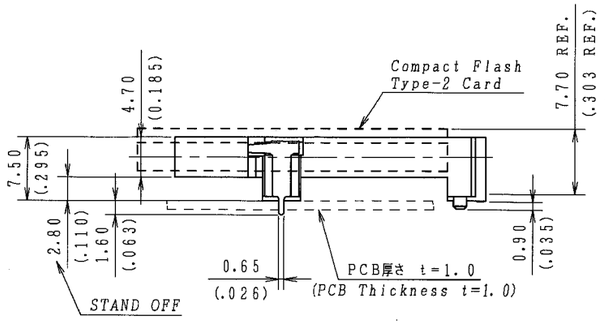

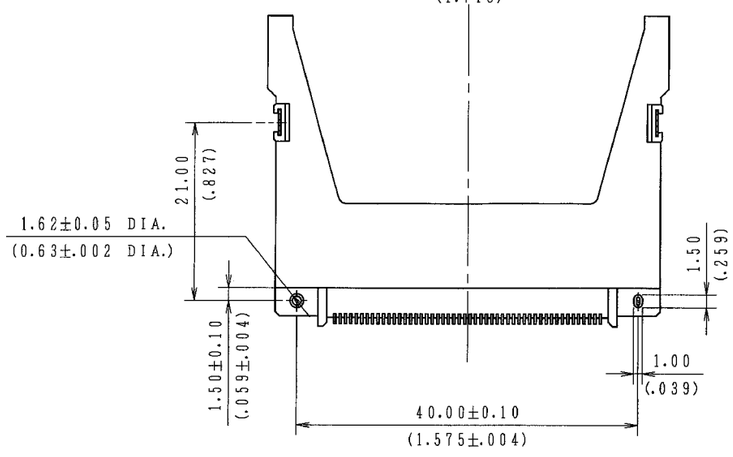

TABLE-1 (Pin Configuration)

Pin Number	Pin Type	L : Contact Length
Pin Number: 1, 13, 38, 50	Power/Ground	5.00±0.10 (.197±.004)
Pin Number: 25, 26	Detect	3.50±0.10 (.138±.004)
All Other Contacts	General	4.25±0.10 (.167±.004)

NOTE(注記)

1. Applicable card type(適合コンパクトフラッシュカードタイプ)
   This pin header can mate both CF card Type-1 and Type-2.
   (本ピンコネクタは、コンパクトフラッシュカードタイプ1及びタイプ2と嵌合出来ます。)
2. Connector Weight : Approximately 3.56gf (Dry State)
   (コネクタの重量 : 約3.56gf(乾燥状態))

QTY.	ITEM	PART NAME	MATERIAL	FINISH, OTHER
2	3	ESD Clip (ESD端子)	Copper Alloy (銅合金)	See TABLE-2 (表-2参照)
50	2	Pin Contact (ピンコンタクト)	Copper Alloy (銅合金)	See TABLE-2 (表-2参照)
1	1	Insulator (インシュレータ)	High Temperature Plastic (耐熱性樹脂)	Color: Black, UL94V-0 Rated (色:黒色, UL94V-0適合品)

MCD-CEN750PE-FG	APPROVED: Y. Hoguchi, May. 12. 2005	DESIGNED: T. Masubuchi, May. 10. 2005	GENERAL TOLERANCE: DIMENSIONS ±0.40 (±.016), ANGLE ±3°	TITLE: 1.27mm Pitch, 50-Pin, Pin Connector (With ESD Clip and Stand-Off For CompactFlash) MCD-CEN750PE-FG	
	CHECKED: Y. Hoguchi, May. 10. 2005	DRAWN BY: T. Masubuchi, May. 10. 2005	SCALE: 2/1	UNIT: mm (inch)	DRAWING NUMBER: G-501541-2 (1/2)	REV. A

PROJECTION

DDK Ltd.

A2

SYM	DATE	ZONE	DESCRIPTION	DESIGNED	CHECKED	APPROVED DATE

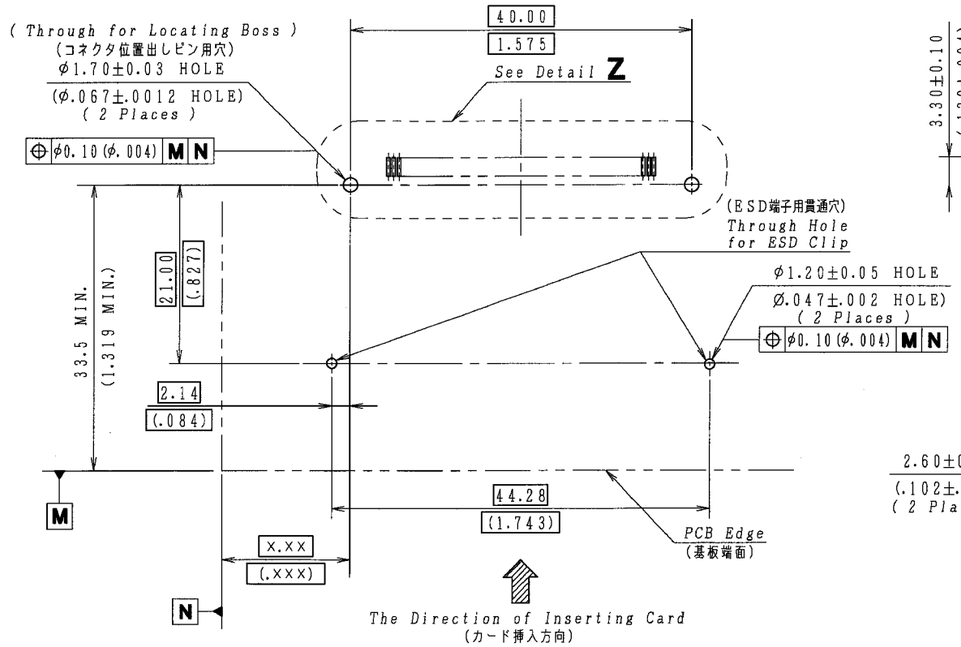

Recommended PCB Mounting Dimensions
(推奨基板取り付け寸法図)

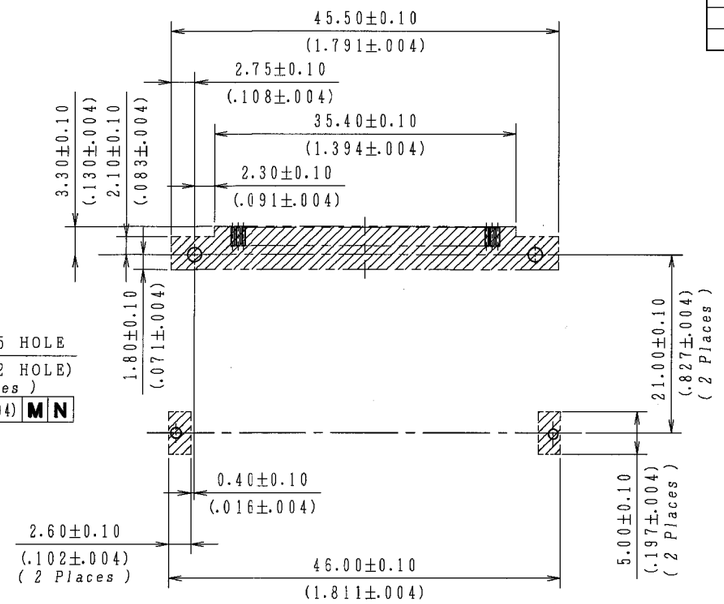

Do not mount other parts in this area.
(他部品搭載不可領域)

Connector Mounting Side View
(コネクタ搭載面から見た図)

Recommended PCB Thickness
(推奨基板厚さ)
t=1.00±0.15 (.039±.006)

品名構成 (Part Numbering Code)

MCD-CEN750PE-FG
1 2 3 4 5 6 7 8

1. シリーズ名 (Series Name)
   MCD:メモリーカード用コネクタシリーズ
   (Memory Card Connector Series)
2. コネクタスタイル (Connector Style)
   C:コンパクトフラッシュ用コネクタ
   (For CompactFlash (CF) Connector)
3. イジェクタ機構の有無及び位置
   (Existence and Location of Eject Unit)
   EN:イジェクタ機構無し (Without Eject Unit)
4. 嵌合側コンタクトピッチ (Contact Mating Side Pitch)
   7:1.27mm
5. 芯 数 (Number of Contacts)
   50:50芯 (50 Contacts)
6. 嵌合スタイル (Mating Style)
   P:プラグコネクタ (Plug Connector)
7. コネクタ形状及びコンタクト表面処理
   (Connector Shape and Contact Plating)
   E:コンパクトフラッシュ タイプⅠ及びタイプⅡカード対応、
   ESD端子対応
   (For CompactFlash Type-I and Type-II Card, With ESD Clip)
8. 鉛フリー対応 (Lead free)
   FG:金フラッシュめっき (Gold flash plating)

TABLE-2 (Contact Plating)
(表-2 コンタクト表面処理)

Part Name (部品名)	Mating Area (接触部)	Termination Area (テールはんだ付け部)
Pin Contacts (ピンコンタクト)	Gold (0.2 μm (8 μinch) Minimum) over Nickel Plating (ニッケル下地 金(0.2μm以上)めっき)	Gold flash over Nickel Plating (ニッケル下地金フラッシュめっき)
ESD Clip (ESD端子)	Gold (0.2 μm (8 μinch) Minimum) over Nickel Plating (ニッケル下地 金(0.2μm以上)めっき)	Tin-Silver over Nickel Plating (ニッケル下地錫・銀めっき)

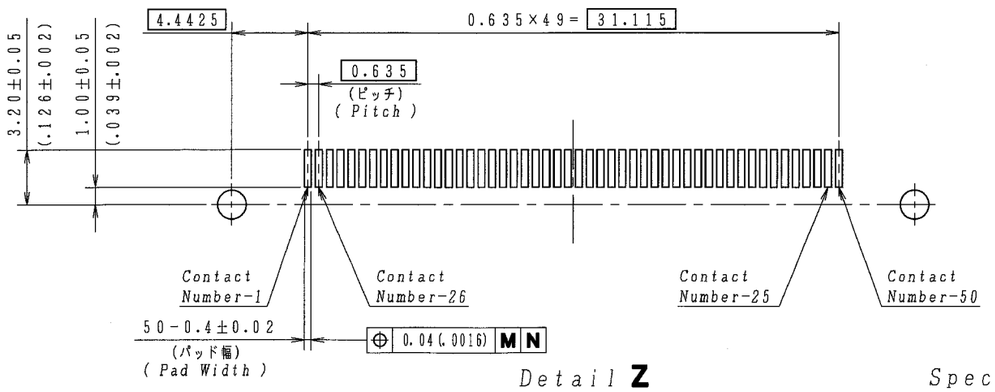

Detail Z
(Scale: 4/1)

Specifications (仕 様)

1. Voltage Rating (定格電圧)
   : 125 Volt AC (rms)
2. Current Rating (定格電流)
   : 0.5 Ampere/Contact
3. Dielectric Withstanding Voltage (耐電圧)
   : 500 Volt AC (rms) for 1 Minute at Sea Level
4. Insulation Resistance (絶縁抵抗)
   : 1000 Mega Ohm Minimum at 500 Volt DC
5. Contact Resistance (Initial) (コンタクト間接触抵抗(初期))
   : 40 milli Ohm Maximum at 1 milli Ampere DC

QTY.	ITEM	PART NAME	MATERIAL	FINISH, OTHER
—	—	—	—	—

APPROVED	DESIGNED	GENERAL TOLERANCE DIMENSIONS	GENERAL TOLERANCE ANGLE	TITLE
Y. Kogure May. 10. 2005	T. Masubuchi May. 10. 2005	±0.40 (±.016)	±3°	1.27mm Pitch, 50-Pin, Pin Connector With ESD Clip and Stand-Off For CompactFlash MCD-CEN750PE-FG
CHECKED	DRAWN BY	SCALE	UNIT	DRAWING NUMBER / REV.
Y. Kogure May. 10. 2005	T. Masubuchi May. 10. 2005	2/1	mm (inch)	G-501541-2 (2/2) / A

PROJECTION

A2

DDK Ltd.